Paulmann

Safety Instructions

0, 1, 2, 4, 6, 7, 8, 9, 11, 15, 18,20,22,27

Info Hotline
+49 (0) 5041 998 389
Mon - Do. 7⁰⁰ - 20⁰⁰
Fr. 7⁰⁰ - 17⁰⁰

Paulmann Licht GmbH
31832 Springe / Germany
www.paulmann.com

Art.-Nr.:
60315

(+MA 173)

PJH 07/14 CE

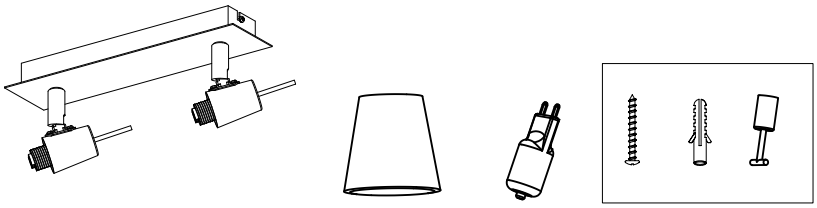

incl.
42W
G9

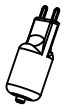

Paulmann
Art.-Nr. 80032

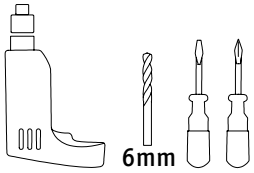

A

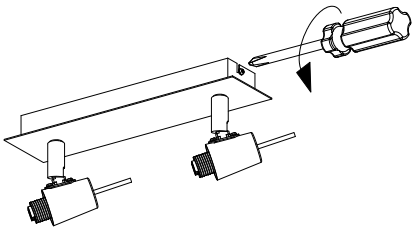

B

Safety Instructions
Nr. 0,1,2

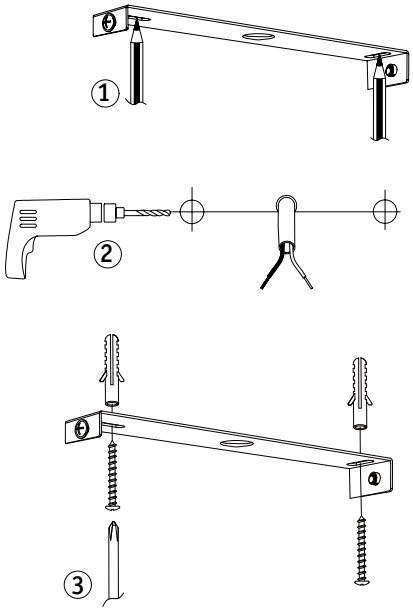

Safety Instructions
Nr. 0,1,4

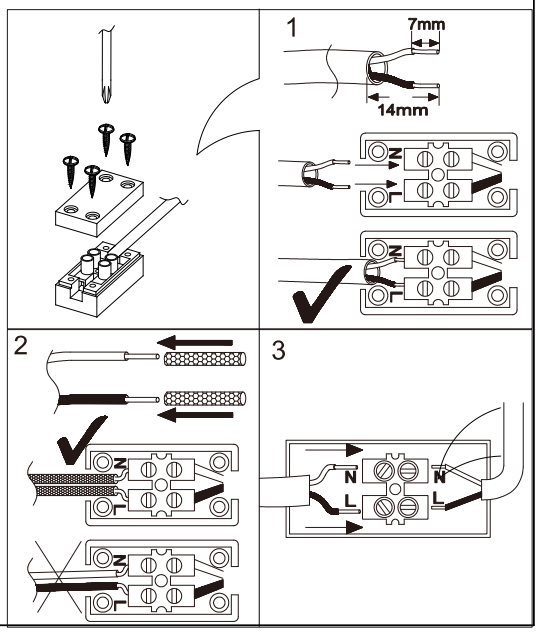

C

Safety Instructions
Nr. 0,1,2

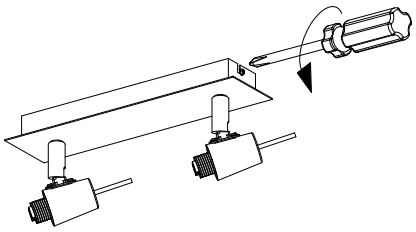

D

Safety Instructions
Nr. 0,1

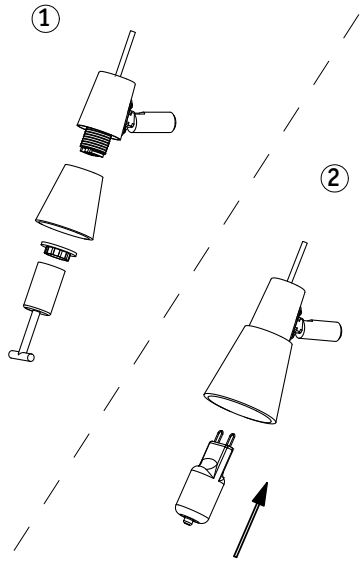

> 0.5 m= 0.5 m
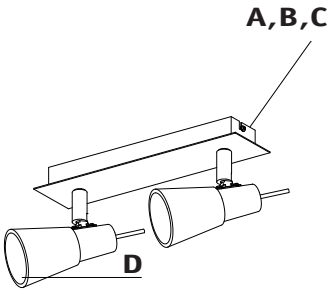
Safety Instructions
Nr. 9